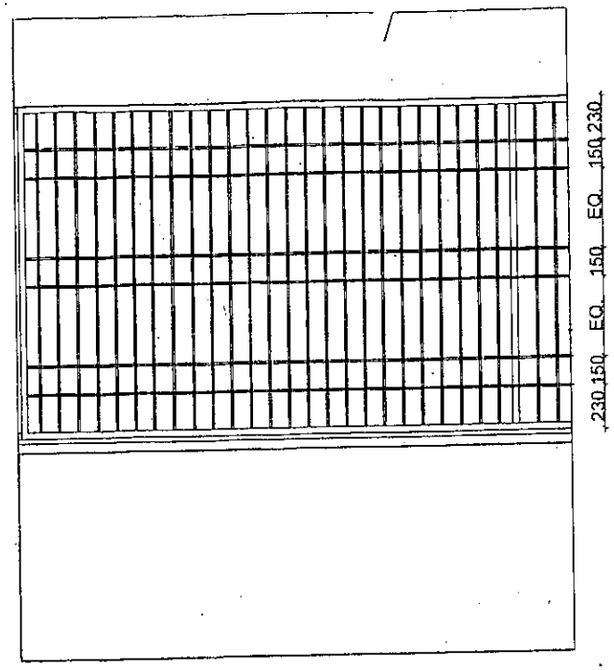

ELEVATION

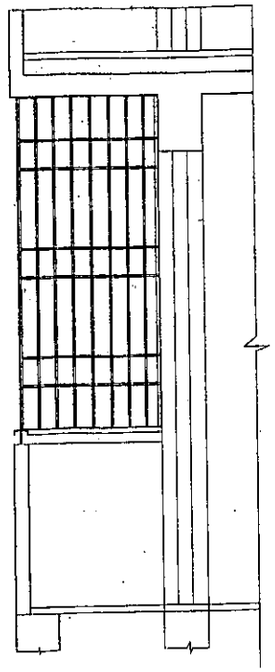

SECTION AT C-C

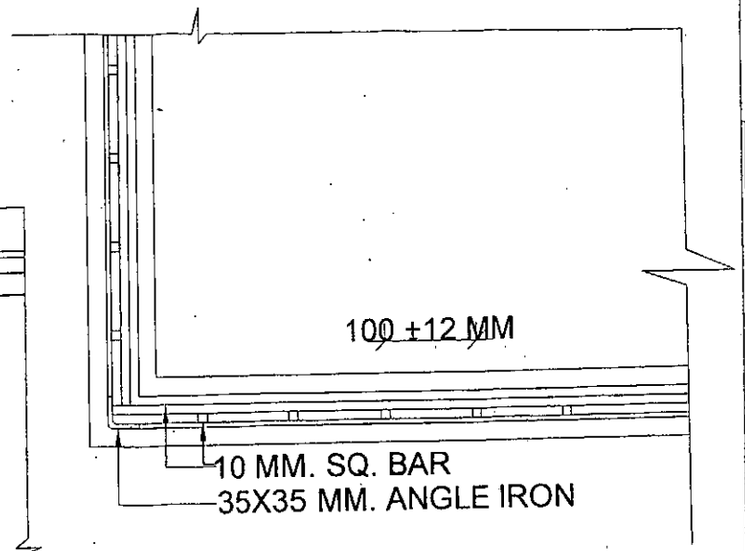

DETAIL AT A

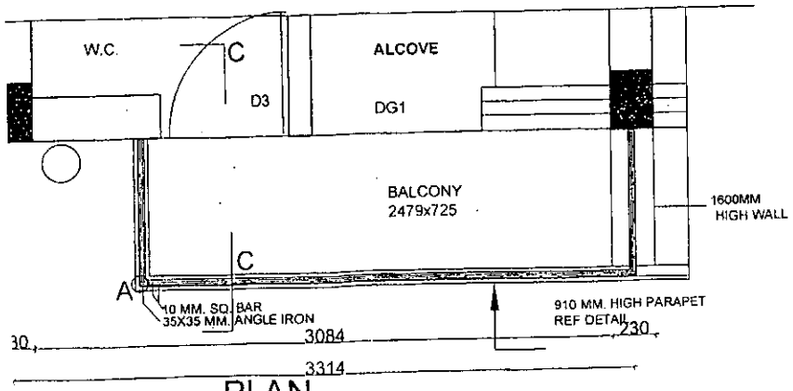

PLAN

NOTE:-
THE CENTRE TO CENTRE DIMENSION BETWEEN BAR OF GRILL CAN BE REDUCED BY THE ALLOTIES AS PER INDIVIDUAL SUITABILITY.

CHANDIGARH HOUSING BOARD

NOTES

1. THIS DRAWING IS THE PROPERTY OF CHB ,CHD. AND MUST NOT BE COPIED,ALTERED OR TRACED IN WHOLE OR IN PART WITHOUT THE PERMISSION OF THE BOARD IN WRITING.
2. DISCREPENCY IF ANY MAY BE DISCUSSED WITH THE ARCHITECT IMMEDIATELY.
3. DIMENSIONS ARE IN M.M ONLY.
4. ALL THE DIMENSIONS ARE TO BE READ & NOT MEASURED
5. BEFORE THE EXECUTION OF THIS DRG./DESIGN ALL THE DIM. SHALL BE CHECKED,VERIFIED IN ACCORDANCE WITH ACTUAL DIM. AT SITE.
6. ALL THE RELEVANT NORMS & CODES RELATED TO EARTHQUAKE, LIVE & DEAD LOADS, FIRE FIGHTING ETC. SHALL BE CONSIDERED AT THE TIME OF STRUCTURAL DESIGN.
7. STRUCTURALSTABILITY SHALL BE THE RESPONSIBILITY OF THE EXECUTIVE AGENCY / STRUCTURAL CONSULTANTS.

ARCHITECT | ASSTT. ARCHITECT

STANDARD DETAIL OF GRILL FOR BALCONIES/VERANDAH

SCALE 1:50	DATE	
PLANNING ASSTT	JOB NO	DRG NO
SHASHI SANGAR		SD 73